SERIES 2
ROTARY VANE PUMP
BOLT-ON STYLE
"Y" MOUNTING
3/8" NPT PORTS
WITH RELIEF VALVE

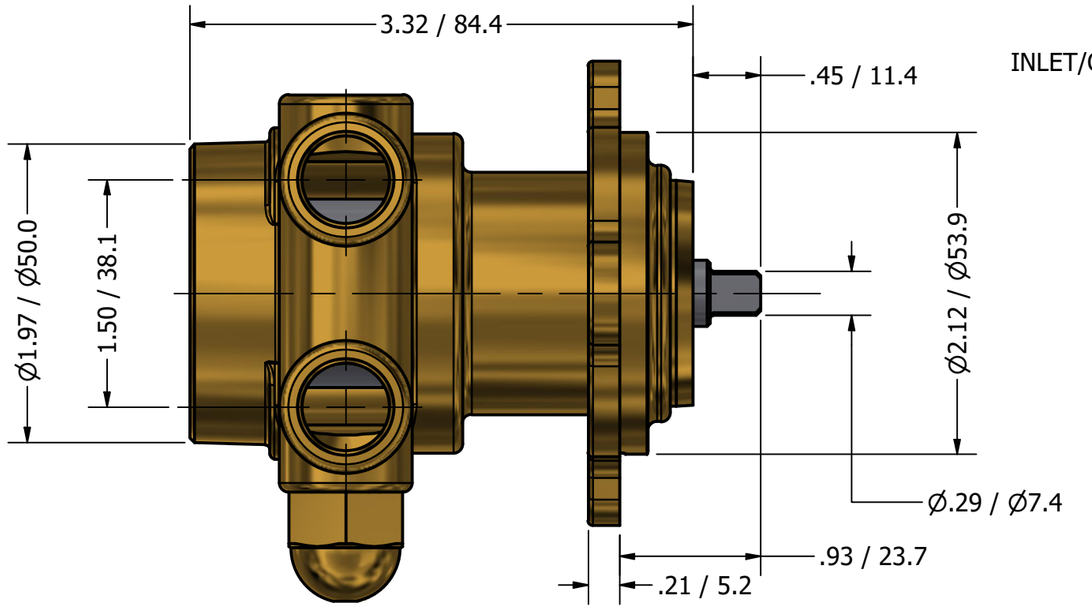

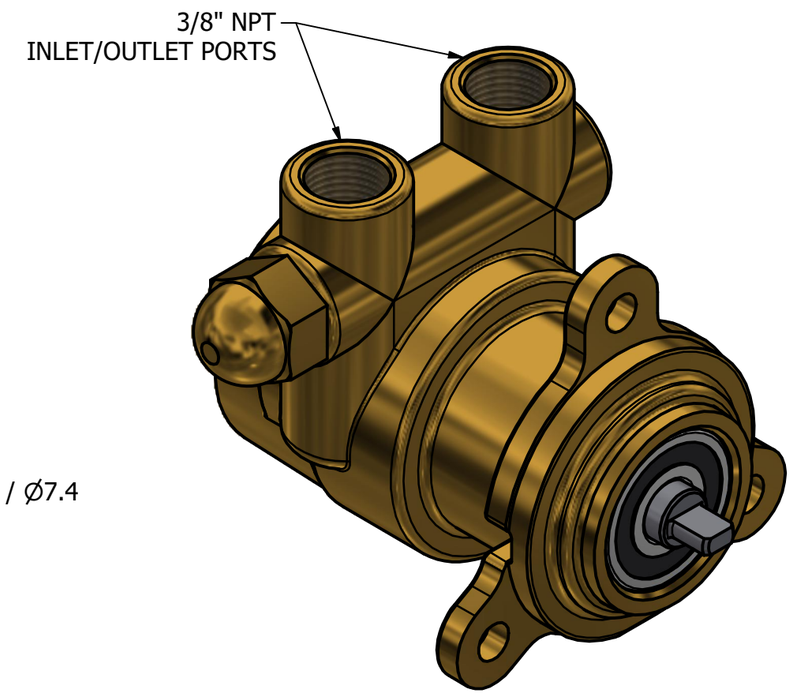

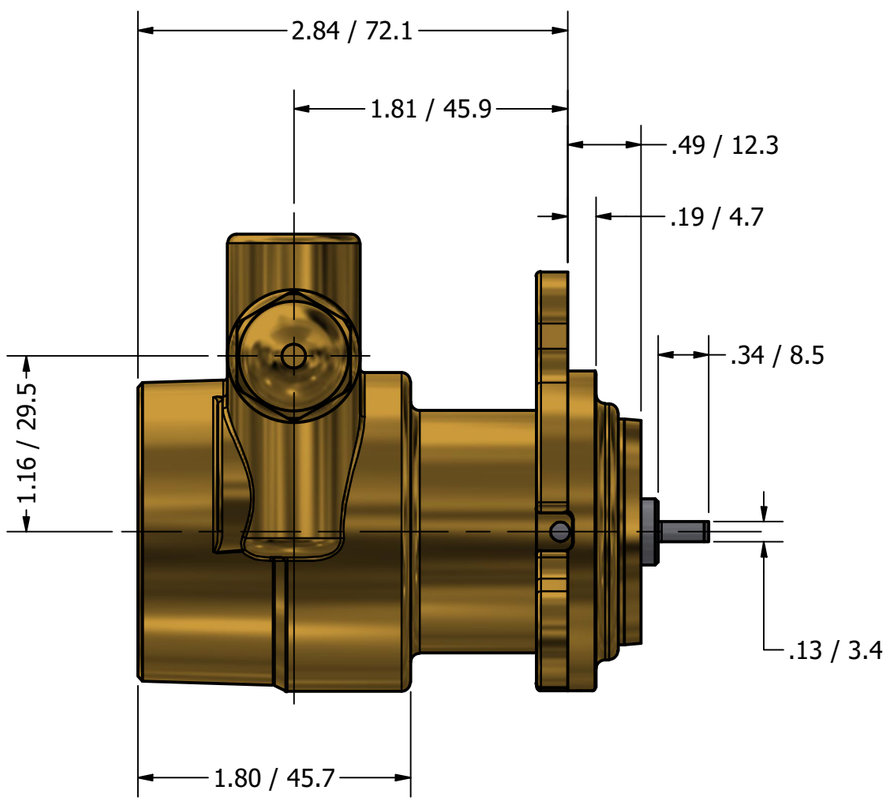

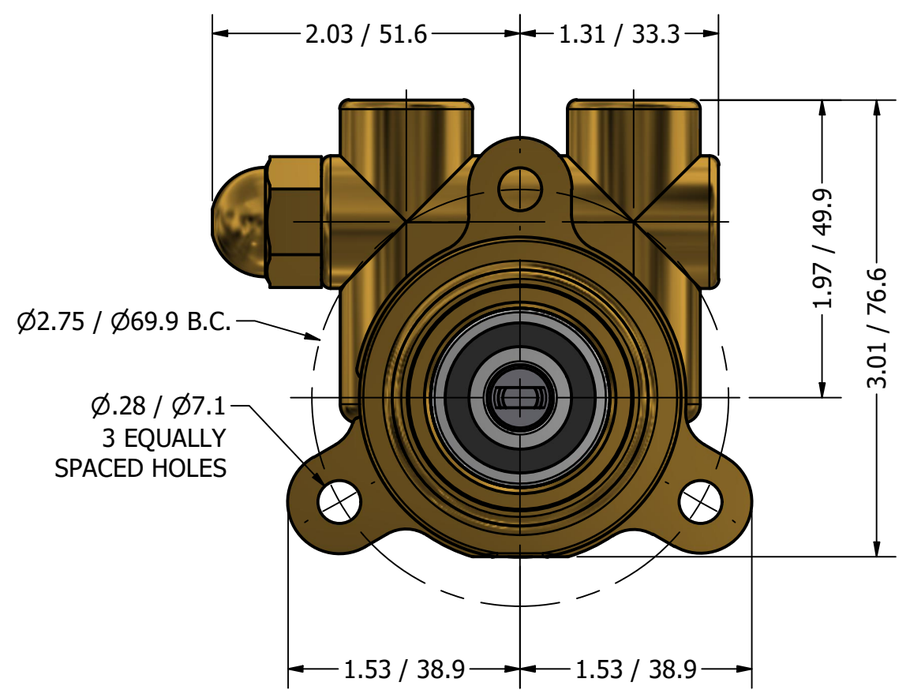

PROCON®
custom | fluid | solutions®

W1078 v2