SERIES 5
ROTARY VANE PUMP
BOLT-ON STYLE
"W" MOUNTING
1/2" NPT PORTS
WITH RELIEF VALVE

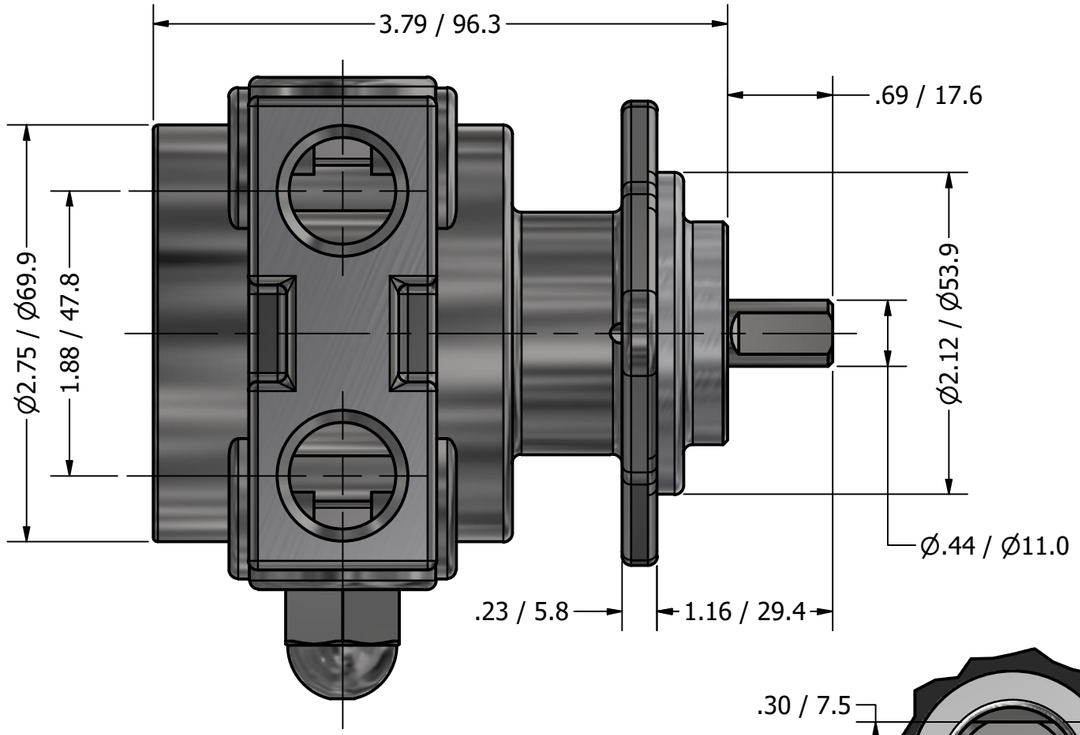

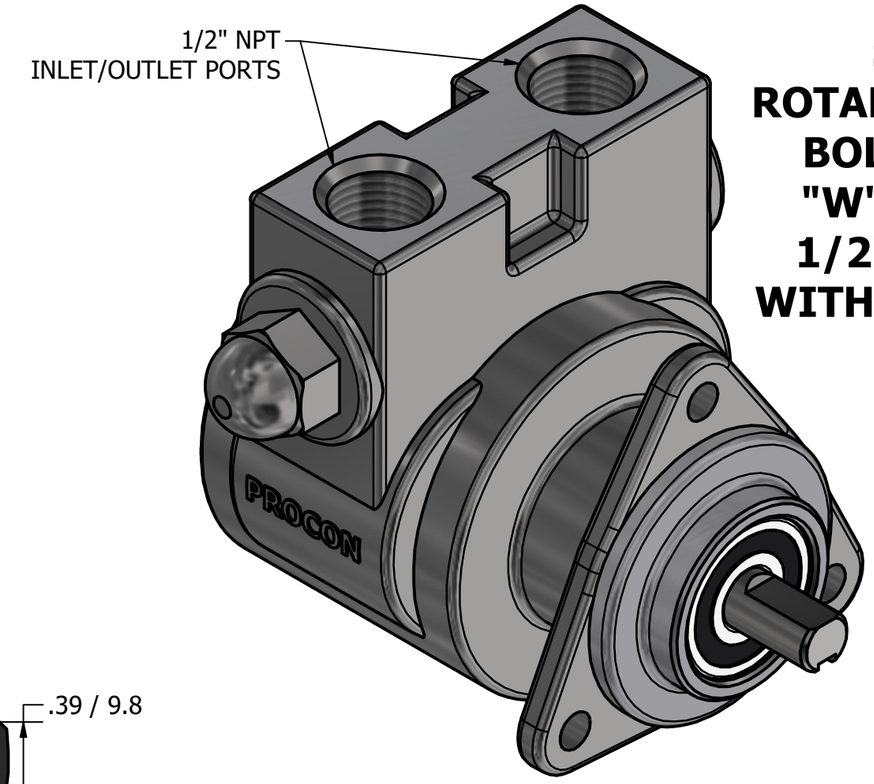

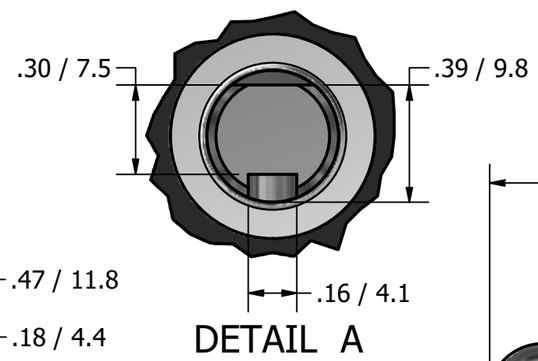

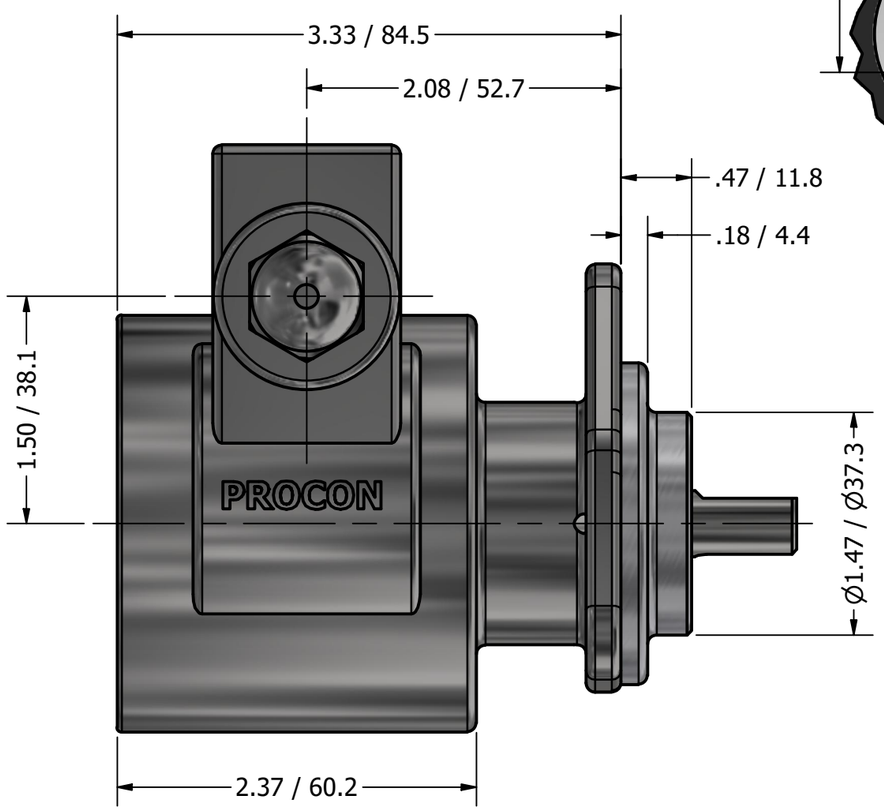

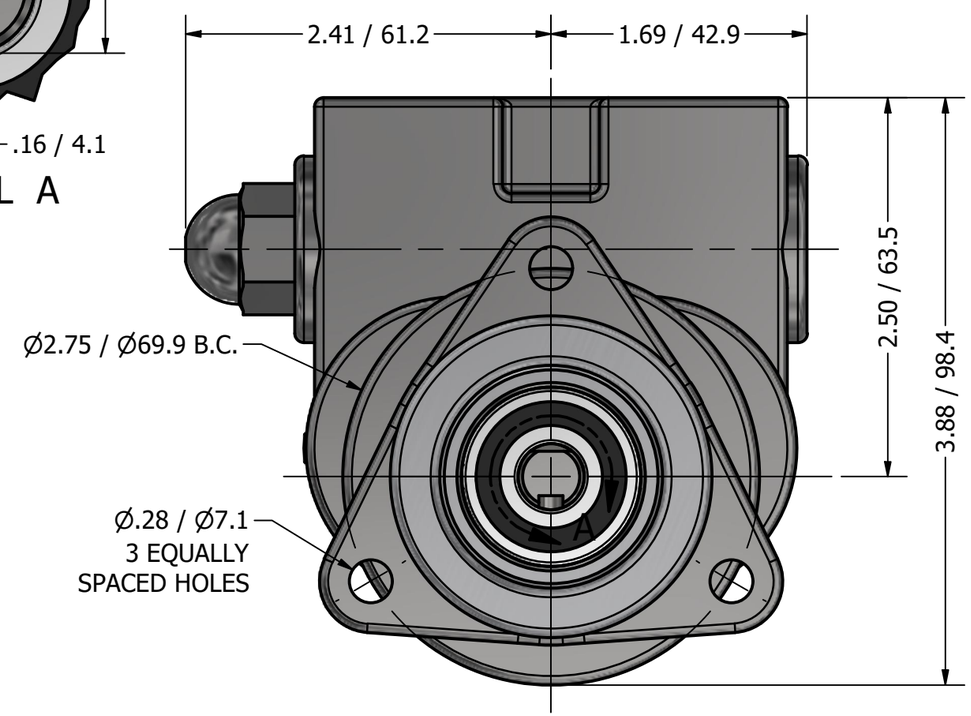

PROCON®
custom | fluid | solutions®

W1184 v2