# SERIES 4
# ROTARY VANE PUMP
# BOLT-ON STYLE
# "W" MOUNTING
# G1/2 (BSPP) PORTS
# WITH RELIEF VALVE

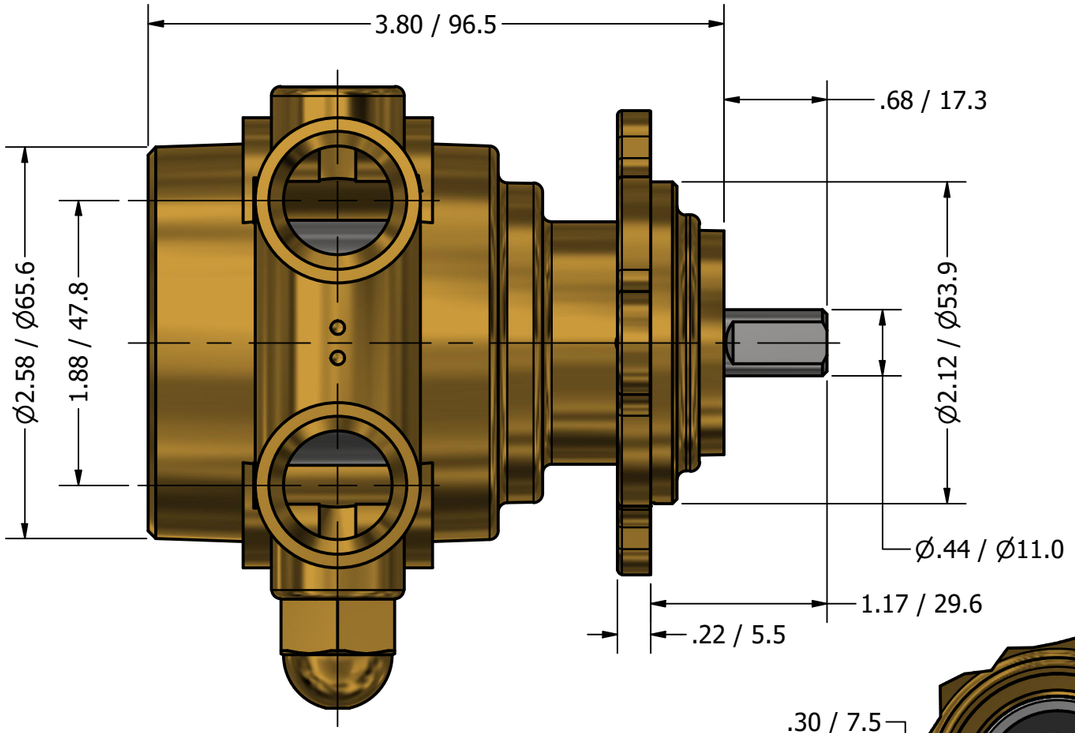


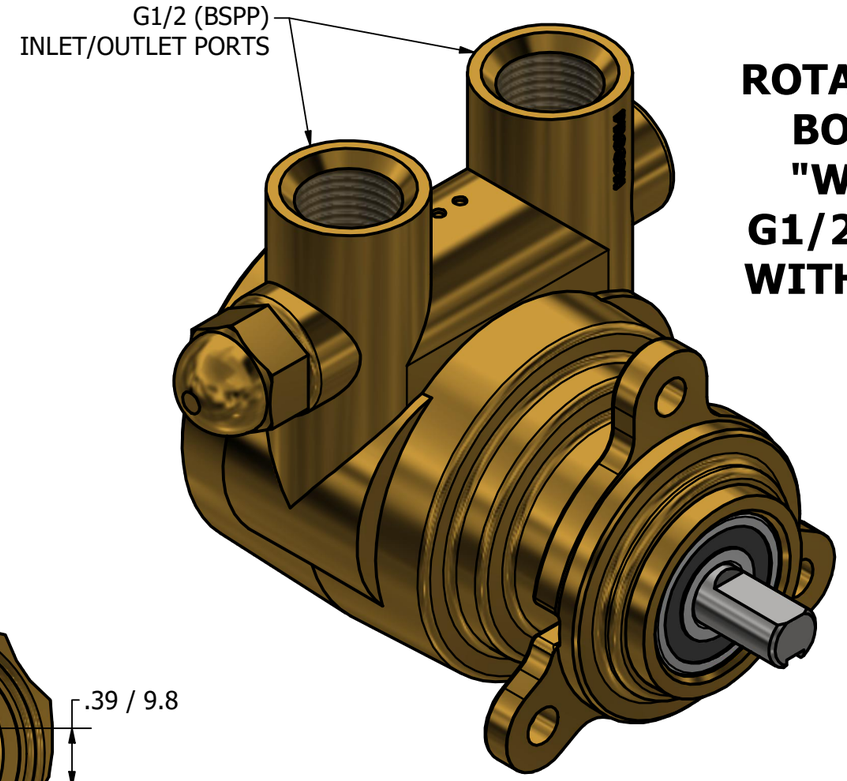


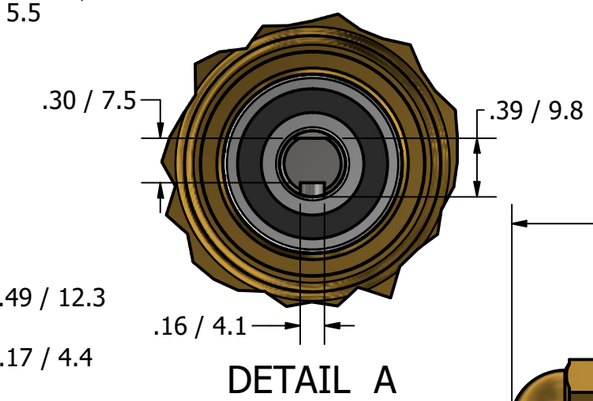


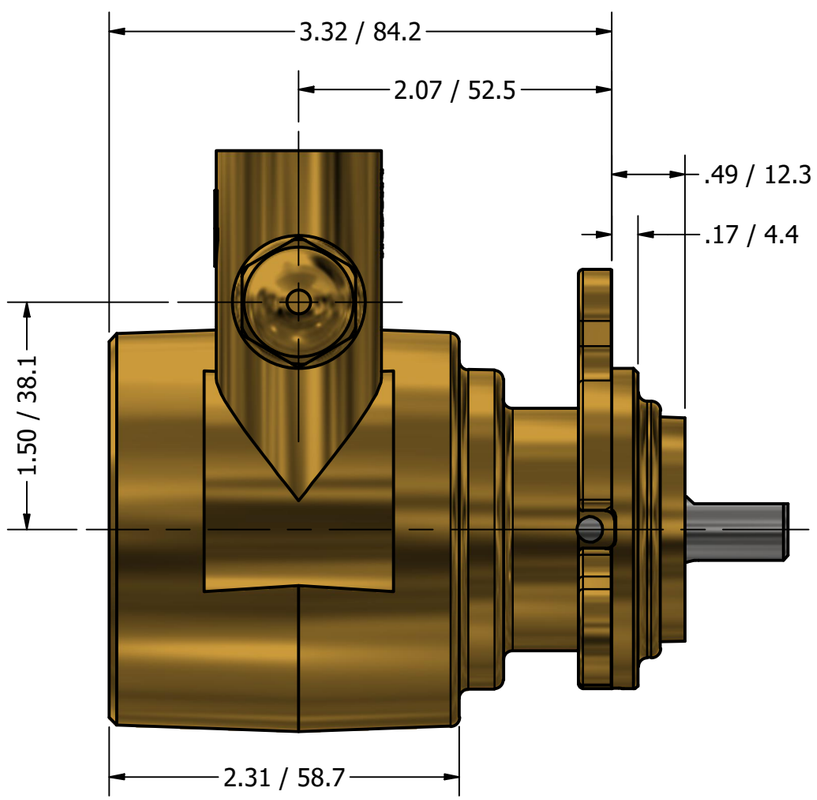


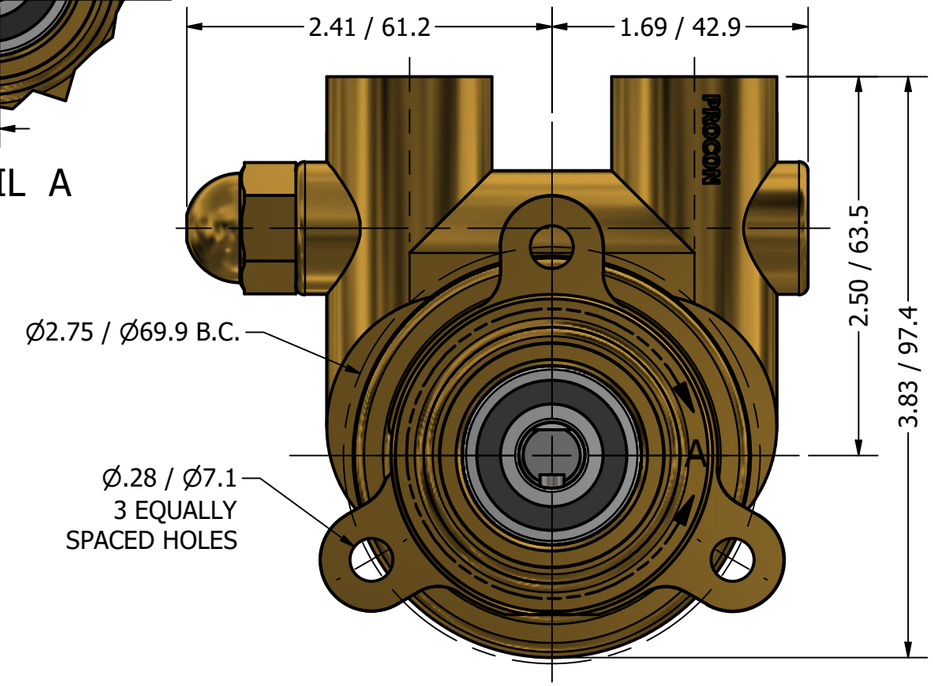


PROCON®
custom | fluid | solutions®

W1151 v2